bürkert
FLUID CONTROL SYSTEMS

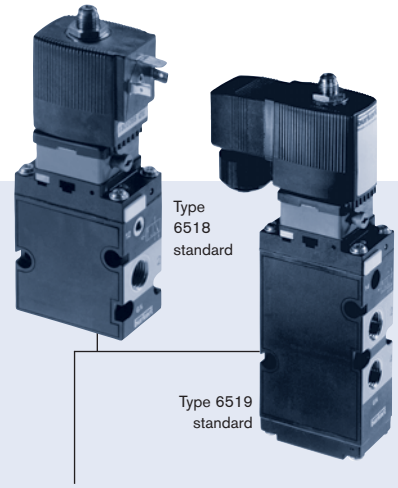

3/2-, 5/2- and 5/3-way Solenoid Valves for process pneumatics

- High flow-rate capacity
- Reduced power consumption
- Single or manifold mounting
- Standard-, EEx m and EEx i versions
- Threaded port G 1/4” or NAMUR flange

Type 6518/6519 can be combined with...

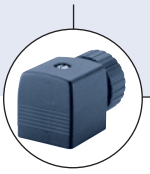

Type 2508
Cable plug

Type 1078
Timer unit

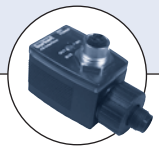

Type 2511/12
ASI cable plug

Type 8600
Dosing control

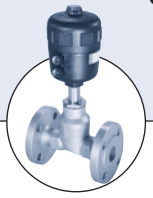

Type 2012
Single-seat globe valve

Type 2030
Diaphragm valve

The Type 6518 is a servo-assisted 3/2-way valve and the Type 6519 is a 5/2 or 5/3-way valve. Together, they form a product line. The valves can be used individually or in blocks.

The valves work without a continuous air consumption and are used for the pneumatic control of double or single-acting actuators. A solenoid valve Type 6014 is used as a pilot.

The use of high quality materials makes it possible to use these valves in the open air and under chemical atmospheres. The product line contains units with Ex-Approvals and NAMUR flange interface.

Valves with circuit function C, D and H monostable are certified acc. IEC 61508 as SIL2.

Content

General technical data	
Orifice	
Type 6518	DN 8
Type 6519	DN 6, 8 and 9
Body material	
Type 6518	Polyamide, reinforced
Type 6519	Polyamide (5/2-way), aluminium (5/3-way)
Thread insert material	Brass or stainless steel
Seal material	
Type 6518	NBR and PUR
Type 6519	NBR, NBR and PUR
Pneumatic connection	
Supply ports 1,3,5	Threaded port G1/4, can also be flanged
Service ports 2 and 4	Threaded port G1/4 or NAMUR flange
Electrical connection	Tag connectors acc. to DIN EN 175301-803 (previously DIN 43650) Form A
Operating voltage	24 V DC 24/110/230 V, 50-60 Hz
Voltage tolerance	±10%
Media	Lubricated or non-lubricated compressed air, neutral gases. Technical vacuum on request
Media temperature	-10 to +50°C
Ambient temperature	
Standard version	-25 to +55° C
EEx m version	-25 to +50° C
EEx i version	-25 to +55° C
Ambient conditions	Open air, chemical atmosphere
Protection class	IP 65 with cable plug
Installation	As required, preferably with actuator upright

Further versions on request

Approvals
FM-Ex
EC Gas Appliances Directive

DTS 1000011067 EN Version: D Status: RL (released | freigegeben | validé) printed: 05.10.2012

bürkert

Type 6518/6519 standard (with tag connector acc. to DIN EN 175301-803 Form A, without cable plug)

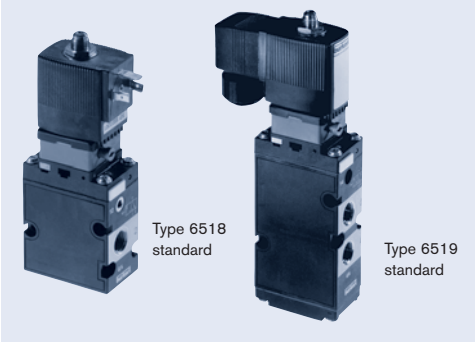

Type 6518 and the Type 6519 together form a product line. Both types can be mounted on a pneumatic module. The valve width of 32 mm allows high flow rates. A solenoid valve Type 6014 is used as a pilot. The valves can be used individually or in blocks.

Power consumption		
Inrush	Hold (hot coil)	
AC [VA]	AC [VA/W]	DC [W]
11	6/2	2

Response times [1]	
Opening	20 [ms]
Closing	40 [ms]

Technical data	
Orifice	DN 8.0 and 9.0
Body materials	
Type 6518	
Pilot valve and main valve	Polyamide, reinforced
Type 6519	
Pilot valve	Polyamide
Main valve	5/2-way; polyamide, 5/3-way; aluminium
Thread insert material	Brass (stainless steel on request)
Seal materials	NBR, NBR and PUR
Pneumatic connection	
Supply ports 1,3,5	Threaded port G 1/4, can also be flanged
Service ports 2 and 4	Threaded port G 1/4 (on request NPT 1/4)
Electrical connection	Tag connector acc. to DIN EN 175301-803 Form A (previously DIN 43650)
Protection class	IP65 with cable plug
Operating voltage	24 V/DC, 24/110/230 V, 50-60 Hz
Voltage tolerance	±10%
Power consumption coil	2 W (100% continuous rating)
Ambient temperature	-25 to +55°C
Media	Lubricated or non-lubricated compressed air, neutral gases
on request	Technical vacuum
Environmental conditions	Open air, chemical atmosphere

[1] Measured at valve outlet at 6 bar and +20°C acc. to ISO 12238.
Opening: Pressure rise 0 to 90%
Closing: Pressure drop 100 to 10%

Ordering chart valves with manual override (without manual override on request)

Circuit function	Orifice [mm]	Seal material body	Port connection threaded port	Q_{Nn} value air[1] [l/min]	Pressure range[2] [bar]	Weight [g]	Nominal power [W]	Voltage/ frequency [V/Hz]	Item no.
Type 6518 standard – thread insert material brass, threaded port 1 and 3 can also be flanged; without cable plug (see Accessories p. 10)									
C 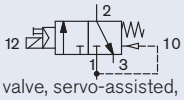 3/2-way valve, servo-assisted, in de-energized position port 2 exhausted	8.0	NBR and PUR (polyamide)	G 1/4	1300	2-8	370	2	024/DC	132 457
								024/50-60	132 458
								110/50-60	132 459
								230/50-60	132 460
D 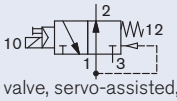 3/2-way valve, servo-assisted, in de-energized position port 2 pressurized	8.0	NBR and PUR (polyamide)	G 1/4	1300	2-8	370	2	024/DC	132 461
								024/50-60	132 462
								110/50-60	132 463
								230/50-60	132 464
Type 6519 standard – thread insert material brass, threaded port 1, 3 and 5 can also be flanged; without cable plug (see Accessories p. 10)									
H 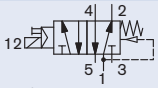 5/2-way valve, servo-assisted, in de-energized position port 2 pressurized, port 4 exhausted	8.0	NBR and PUR (polyamide)	G 1/4	1300	2-8	450	2	024/DC	132 465
								024/50-60	132 466
								110/50-60	132 467
								230/50-60	132 468
L 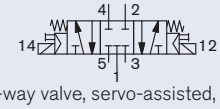 5/3-way valve, servo-assisted, in middle position all ports locked	9.0	NBR (aluminium)	G 1/4	1300	3-10	720	2	024/DC	132 469
								024/50-60	132 470
								110/50-60	132 471
								230/50-60	132 472
N 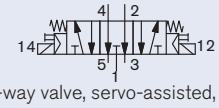 5/3-way valve, servo-assisted, in middle position ports 2 and 4 exhausted	9.0	NBR (aluminium)	G 1/4	1300	3-10	720	2	024/DC	132 473
								024/50-60	132 474
								110/50-60	132 475
								230/50-60	132 476

1) **Flow rate: QNn value air [l/min]**: Measured at +20°C, 6 bar pressure at valve inlet, 1 bar pressure difference
2) **Pressure values [bar]**: Gauge pressures with respect to the prevailing atmospheric pressure

Manifold assembly see page 8 **Accessories** see page 10 **Dimensions** see page 11

DTS 1000011067 EN Version: D Status: RL (released | freigegeben | validé) printed: 05.10.2012

bürkert

Type 6518/6519 EEx m (with moulded cable, 3 m long, terminal box on request)

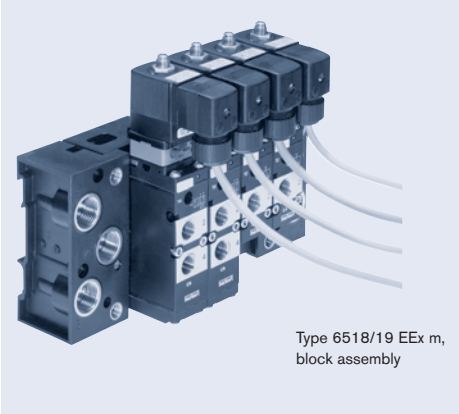

Type 6518/19 EEx m, block assembly

The approval EEx m is achieved by the mounting of an approved push-over coil. The cable connection and the cable are non-detachable and sealed together with the valve. The valves can be used individually or in blocks.

Response times [1]	
Opening	20 [ms]
Closing	50 [ms]

[1] Measured at valve outlet at 6 bar and +20°C acc. to ISO 12238.
Opening: Pressure rise 0 to 90%,
Closing: Pressure drop 100 to 10%

Technical data	
Orifice	DN 8.0 and 9.0
Body materials	
Type 6518	
Pilot valve and main valve	Polyamide, reinforced
Type 6519	
Pilot valve	Polyamide
Main valve	5/2-way; polyamide, 5/3-way; aluminium
Thread insert material	Brass (stainless steel on request)
Seal materials	NBR, NBR and PUR
Pneumatic connection	
Supply ports 1,3,5	Threaded port G 1/4, can also be flanged
Service ports 2 and 4	Threaded port G 1/4 (on request NPT 1/4)
Electrical connection	Moulded cable, 3 m (non-detachable), Terminal box on request
Protection class	IP65
Approval	II 2G EEx m II T 5 PTB 00 ATEX 2129X II 2DIP 65T 100°C
Operating voltage	24/110/230 V/UC
Voltage tolerance	±10%
Power consumption coil	3 W (100% continuous rating)
Ambient temperature	-25 to +50°C
Media	Lubricated or non-lubricated compressed air, neutral gases
on request	technical vacuum
Environmental conditions	Open air, chemical atmosphere
For use in zone	1, 2, 21 and 22

Ordering chart valves with manual override (without manual override on request)

Circuit function	Orifice [mm]	Seal material body	Port connection threaded port	Q_{Nn} value air [1] [l/min]	Pressure range[2] [bar]	Weight [g]	Nominal power [W]	Voltage/ frequency [V/Hz]	Item no.
Type 6518 EEx m – thread insert material brass, threaded port 1 and 3 can also be flanged; with moulded cable, 3 m long [3]									
C 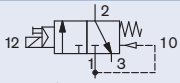 3/2-way valve, servo-assisted, in de-energized position port 2 exhausted	8.0	NBR and PUR (polyamide)	G 1/4	1300	2-8	600	3	024/UC	134 716
								110/UC	134 717
								230/UC	134 718
D 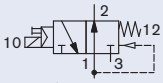 3/2-way valve, servo-assisted, in de-energized position port 2 pressurized	8.0	NBR and PUR (polyamide)	G 1/4	1300	2-8	600	3	024/UC	134 719
								110/UC	134 720
								230/UC	134 721
Type 6519 EEx m – thread insert material brass, threaded port 1, 3 and 5 can also be flanged; with moulded cable, 3 m long [4]									
H 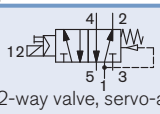 5/2-way valve, servo-assisted, in de-energized position port 2 pressurized, port 4 exhausted	8.0	NBR and PUR (polyamide)	G 1/4	1300	2-8	700	3	024/UC	134 722
								110/UC	134 723
								230/UC	134 724
L 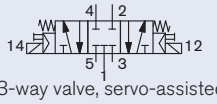 5/3-way valve, servo-assisted, in middle position all ports locked	9.0	NBR (aluminium)	G 1/4	1300	3-10	1,100	3	024/UC	134 725
								110/UC	134 726
								230/UC	134 727
N 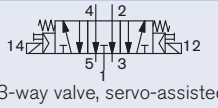 5/3-way valve, servo-assisted, in middle position ports 2 and 4 exhausted	9.0	NBR (aluminium)	G 1/4	1300	3-10	1,100	3	024/UC	134 728
								110/UC	134 729
								230/UC	134 730

1) Flow rate: QNn value air [l/min]: Measured at +20°C, 6 bar pressure at valve inlet, 1 bar pressure difference **2) Pressure values [bar]**: Gauge pressures with respect to the prevailing atmospheric pressure
3) Versions with terminal box on request **4) Circuit function H (5/2-way) as impulse version on request**

Manifold assembly see page 8 **Accessories** see page 10 **Dimensions** see page 13

DTS 1000011067 EN Version: D Status: RL (released | freigegeben | validé) printed: 05.10.2012

bürkert

Type 6518/6519 EEx i (with tag connector acc. to DIN EN 175301-803 Form A, without cable plug)

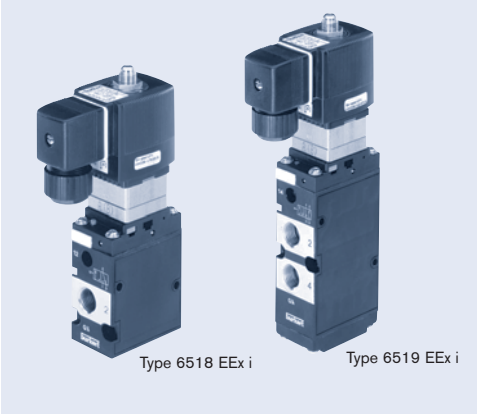

The intrinsically-safe Type 6518 EEx i and 6519 EEx i valves consist of an intrinsically-safe pilot control and a pneumatic amplifier. The diaphragm-controlled valve seats work with very low friction, ensuring reliable switching of the valve, even after long shutdown periods.

Technical data	
Orifice	DN 8.0
Body materials Pilot valve Main valve	 Stainless steel 1.4305 or brass Polyamide, glass-fibre reinforced
Thread insert material	Stainless steel or brass, nickel-plated
Seal materials	FPM, NBR and PUR
Pneumatic connection Supply ports 1,3,5 Service ports 2 and 4	 Threaded port G 1/4 Threaded port G 1/4
Electrical connection	Tag connector acc. to DIN EN 175301-803 Form A (previously DIN 43650) for cable plug Type 2508 (see Accessories). Ensure correct polarity!
Protection class	IP65 with cable plug
Ambient temperature	-25 to +55°C
Media	Lubricated or non-lubricated compressed air, instrument air, nitrogen
Environmental conditions	Open air, chemical atmosphere
For use in zone	1, 2, 21 and 22

Response times [1]	
Opening	75 [ms]
Closing	115 [ms]

[1] Measured at valve outlet at 6 bar and +20°C acc. to ISO 12238.
Opening: Pressure rise 0 to 90%,
Closing: Pressure drop 100 to 10%

Note

These units may only be used in explosive atmospheres in the manner approved by the Federal Institute of Physics and Technology (PTB), i.e., the permissible maximum electrical values must be complied with. Suitable barriers and isolating modules are available for this.

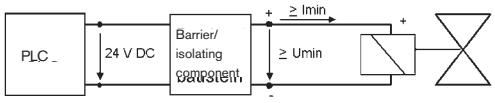

The valve is intended for operation on 24 VDC outputs via the intermediate switching of a corresponding intrinsically-safe operating resource (isolating module or barrier).
If required, request the "Recommended Barrier and Isolating Module" data sheet.

Electrical data - Coil AC10 EEx i		
Approval	II 2G EEx ia IIC T6 PTB 01 ATEX 2101 II 2D Ex ia D21 T 80°C	
Functional values for the valve switching function[1]	**at +20°C**	**at +55°C**
Minimum switching current	29 mA	29 mA
Nominal resistance of the coil	310 Ω	360 Ω
Minimum terminal voltage	9.0 V	10.4 V
Permissible maximum values acc. to certificate of conformity		
Ui	35 V	
Ii	0.9 A	
Pi	1.1 W	

[1] With high-impedance coil on request

Ordering chart valves without manual override (with manual override and high-impedance coil on request)

Circuit function	Orifice [mm]	Seal material body	Port connection threaded port	QNn value air [1] [l/min]	Pressure range [2] [bar]	Weight [g]	Body material pilot valve	Pilot air thread insert material	Item no.
Type 6518 EEx i									
C 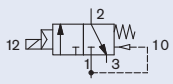 3/2-way valve, servo-assisted, in de-energized position port 2 exhausted	8.0	NBR and PUR (polyamide)	G 1/4	1300	2-8	580	St. st. 1.4305	St. st.	145 111
								brass, nickel plated	144 486
							brass	brass, nickel plated	147 253
Type 6519 EEx i									
H 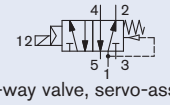 5/2-way valve, servo-assisted, in de-energized position port 2 pressurized, port 4 exhausted	8.0	NBR and PUR (polyamide)	G 1/4	1300	2-8	670	St. st. 1.4305	St. st.	144 484
								brass, nickel plated	144 485
							brass	brass, nickel plated	147 252

1) Flow rate: QNn value air [l/min]: Measured at +20°C, 6 bar pressure at valve inlet, 1 bar pressure difference
2) Pressure values [bar]: Gauge pressures with respect to the prevailing atmospheric pressure

Manifold assembly see page 8 **Accessories** see page 10 **Dimensions** see page 14

DTS 1000011067 EN Version: D Status: RL (released | freigegeben | validé) printed: 05.10.2012

bürkert

Type 6519 NAMUR standard (with tag connector acc. to DIN EN 175301-803 Form A, without cable plug)

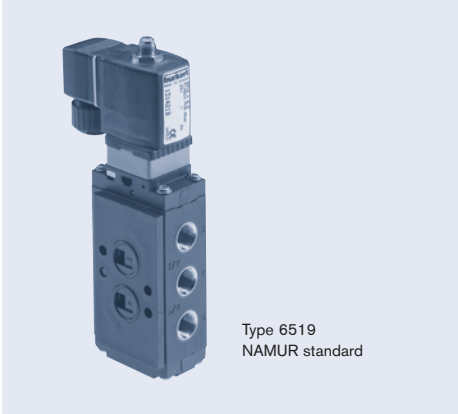

Type 6519
NAMUR standard

The valve bodies of Type 6519 NAMUR are identical with the EEx m variants. The difference is in the coils, which are laid out and approved in different ways. By changing the coil on the valve body, it is possible to easily convert from Non-Ex operation to Ex operation (or vice versa). The coils are designed to be push-over and can be locked in 4 x 90° displaced positions and be positioned any where in-between.

Technical data	
Orifice	DN 6.0
Body materials Pilot valve and main valve	 Polyamide (PA)
Thread insert material	Brass, nickel-plated or stainless steel
Seal material	NBR and PUR
Pneumatic connection Supply ports 1,3,5 Service ports 2 and 4	 Threaded port G 1/4 NAMUR flange
Electrical connection	Tag connector acc. to DIN EN 175301-803 Form A (previously DIN 43650)
Protection class	IP65 with cable plug
Operating voltage	24/110/230 V/UC (direct or universal current)
Voltage tolerance	±10%
Duty cycle	100 % continuous rating
Ambient temperature	-25 to +55°C
Media	Compressed air, nitrogen, instrument air
Environmental conditions	Slightly aggressive, also open air

Power consumption		
Inrush	**Hold (hot coil)**	
AC [VA]	**AC [VA/W]**	**DC [W]**
11	6/2	2

Response times [1]	
Opening	20 [ms]
Closing	40 [ms]

[1] Measured at valve outlet at 6 bar and +20°C acc. to ISO 12238.
Opening: Pressure rise 0 to 90%,
Closing: Pressure drop 100 to 10%

Ordering chart valves with manual override (without manual override on request)

Circuit function	Orifice [mm]	Seal material body	Thread insert material [1]	Port connection threaded port	Q_{Nn} value air [2] [l/min]	Pressure range [3] [bar]	Weight [g]	Power consumption [W]	Voltage/ frequency [V/Hz]	Item no.
C 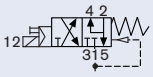 3/2-way valve with exhaust recycling, in de-energized position port 2 fed back internally	6.0	NBR and PUR	stainless steel	G 1/4	900	2-8	460	2	024/DC	131 425
									024/50-60	131 426
									110/50-60	131 427
									230/50-60	131 428
H 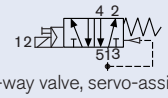 5/2-way valve, servo-assisted, in de-energized position pressure port 1 connected to port 2, output 4 exhausted	6.0	NBR and PUR	brass, nickel-plated	G 1/4	900	2-8	460	2	024/DC	131 421
									024/50-60	131 422
									110/50-60	131 423
									230/50-60	131 424

1) If the connectors are from stainless steel, the mounting screws will also be from stainless steel
2) Flow rate: QNn value air [l/min]: Measured at +20°C, 6 bar pressure at valve inlet, 1 bar pressure difference
3) Pressure values [bar]: Gauge pressures with respect to the prevailing atmospheric pressure

All valves can be operated in circuit function C as well as in circuit function H. By replacing the adapter plate that comes with the valves, the change between the two circuit functions can be set up.

Manifold assembly see page 8 **Accessories** see page 10 **Dimensions** see page 15

DTS 1000011067 EN Version: D Status: RL (released | freigegeben | validé) printed: 05.10.2012

bürkert

Type 6519 NAMUR EEx m (with moulded cable) or EEx me (with terminal box)

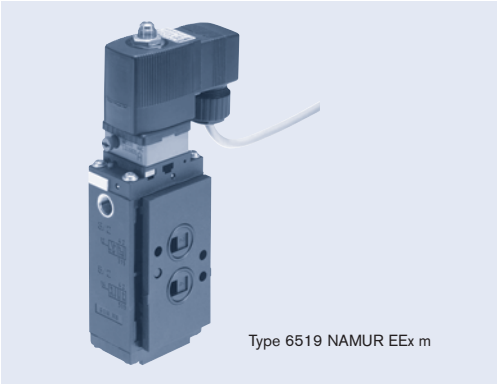
Type 6519 NAMUR EEx m

Type 6519 NAMUR EEx m NAMUR valve for process plants switches reliably, even when fully restricted. The valve made out of premium polyamide can be operated either as a 5/2 or a 3/2-way version through different mounting plates. The solenoid valve Type 6014 with a coil approved for use in hazardous areas is connected as a pilot. The NAMUR flange interface allows easy assembly on different pneumatic actuators on the spot.

The valve bodies are identical with the Type 6519 NAMUR standard version. The difference between the valves is in the coils, which are laid out and approved in different ways. By changing the coil on the valve body, it is possible to easily convert from Non-Ex operation to Ex operation (or vice versa). Both coil versions (with moulded cable or with terminal box) are designed to be push-over and can be locked in 4 x 90° displaced positions and be positioned any where in-between.

Technical data	
Orifice	DN 6.0
Body materials Pilot valve and main valve	 Polyamide (PA)
Thread insert material	Brass, nickel-plated or stainless steel
Seal material	NBR and PUR
Pneumatic connection Supply ports 1,3,5 Service ports 2 and 4	 Threaded port G 1/4 NAMUR flange
Electrical connection	Tag connector acc. to DIN EN 175301-803 Form A (previously DIN 43650)
Protection class	IP65 with cable plug
Approval	II 2G EEx m II T 5 PTB 00 ATEX 2129X II 2DIP 65T 100°C
Operating voltage	24/110/230 V/UC (direct or universal current)
Voltage tolerance	±10%
Duty cycle	100% continuous rating
Ambient temperature	-25 to +55°C
Media	Lubricated or non-lubricated compressed air, nitrogen, instrument air
Environmental conditions	Slightly aggressive, also open air

Response times [1]	
Opening	20 [ms]
Closing	40 [ms]

[1] Measured at valve outlet at 6 bar and +20°C acc. to ISO 12238.
Opening: Pressure rise 0 to 90%,
Closing: Pressure drop 100 to 10%

Ordering chart valves with manual override (without manual override on request)

Circuit function	Orifice [mm]	Seal material body	Thread insert material [1]	Port connection threaded port	QNn value air [2] [l/min]	Pressure range [3] [bar]	Weight [g]	Power consumption [W]	Voltage/ frequency [V/Hz]	Item no.
Version acc. to EEx m, with 3 m long moulded cable										
C 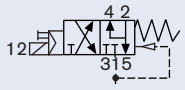 3/2-way valve, with exhaust air return, in de-energized position port 2 exhausted internally	6.0	NBR and PUR	stainless steel	G 1/4	900	2-8	650	3	024/UC	131 631
									110/UC	131 632
									230/UC	131 633
			brass, nickel-plated	G 1/4	900	2-8	650	3	024/UC	131 627
									110/UC	131 628
									230/UC	131 629
Version acc. to EEx me, with terminal box without fuse (see Accessories p. 10)										
H 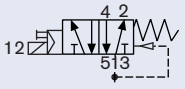 5/2-way valve, servo-assisted, in de-energized position pressure port 1 connected to port 2, port 4 exhausted	6.0	NBR and PUR	stainless steel	G 1/4	900	2-8	690	3	024/UC	139 067
									110/UC	139 068
									230/UC	139 069
			brass, nickel-plated	G 1/4	900	2-8	690	3	024/UC	427 978
									110/UC	139 065
									230/UC	139 066

1) If the connectors are from stainless steel, the mounting screws will also be from stainless steel
2) Flow rate: QNn value air [l/min]: Measured at +20°C, 6 bar pressure at valve inlet, 1 bar pressure difference
3) Pressure values [bar]: Gauge pressures with respect to the prevailing atmospheric pressure.

All valves can be operated in circuit function C as well as in circuit function H. By replacing the adapter plate that comes with the valves, the change between the two circuit functions can be set up.

Manifold assembly see page 8 **Accessories** see page 10 **Dimensions** see page 15

DTS 1000011067 EN Version: D Status: RL (released | freigegeben | validé) printed: 05.10.2012

bürkert

Type 6519 NAMUR EEx i (with tag connector acc. to DIN EN 175301-803 Form A, without cable plug)

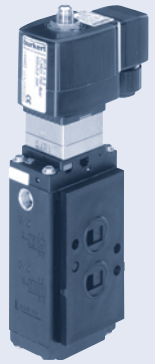

Type 6519
NAMUR EEx ia

The Type 6519 NAMUR EEx i valve is used for the pneumatic control of double or single-acting actuators with a NAMUR adapter plate flange. The circuit function can easily be changed using an adapter plate. In the 3/2-way function, feedback of the exhaust air takes place in the spring area of the armature drive. The diaphragm-controlled valve seats work with very low friction, ensuring reliable switching of the valve even after long shutdown periods and at ambient temperatures below 0 °C. The valves work without a continuous air consumption.

Note

The units may only be used in explosive atmospheres in the manner approved by the Federal Institute of Physics and Technology (PTB), i.e., the permissible maximum electrical values must be complied with. Suitable barriers and isolating modules are available for this.

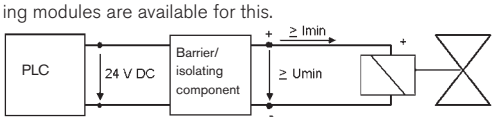

The valve is intended for operation on 24 VDC outputs via the intermediate switching of a corresponding intrinsically-safe operating resource (isolating module or barrier).
If required, request the "Recommended Barrier and Isolating Module" data sheet.

Technical data	
Orifice	DN 6.0
Body materials Pilot valve Main valve	 Stainless steel 1.4305 or brass Polyamide, glass-fibre reinforced
Thread insert material	Stainless steel or brass, nickel-plated
Seal materials	FPM, NBR and PUR
Pneumatic connection Supply ports 1,3,5 Service ports 2 and 4	 Threaded port G 1/4 NAMUR flange acc. to VDI/VDE 3845
Electrical connection	Tag connector acc. to DIN EN 175301-803 Form A (previously DIN 43650) for cable plug Type 2508 (see Accessories). Ensure correct polarity!
Protection class	IP65 with cable plug
Ambient temperature	-25 to +55°C
Media	Lubricated or non-lubricated compressed air, instrument air, nitrogen
Environmental conditions	Open air, chemical atmosphere

Response times [1]	[ms]
Opening	75
Closing	115

[1] Measured at valve outlet at 6 bar and +20°C acc. to ISO 12238.
Opening: Pressure rise 0 to 90%,
Closing: Pressure drop 100 to 10%

Electrical data		
Approval	II 2G EEx ia IIC T6 PTB 01 ATEX 2101 II 2D Ex ia D21 T 80°C	
Functional values for valve switching function [1]	**at +20°C**	**at +55°C**
Minimum switching current	29 mA	29 mA
Nominal resistance of the coil	310 Ω	360 Ω
Minimum terminal voltage	9.0 V	10.4 V
Permissible maximum values acc. to certificate of conformity		
Ui	35 V	
Ii	0.9 A	
Pi	1.1 W	

[1] With high-impedance coil on request

Ordering chart valves without manual override (with manual override and high-impedance coil on request)

Circuit function	Orifice [mm]	Seal material body	Port connection threaded port	Q_{Nn} value air[1] [l/min]	Pressure range[2] [bar]	Weight [g]	Body material pilot valve	Material for control air bush	Item no.
C 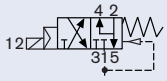 3/2-way valve, with exhaust air return, in de-energized position port 2 exhausted internally	6.0	NBR and PUR (polyamide)	G 1/4	900	2-8	670	St. st. 1.4305	St. st.	144 482
								brass, nickel-plated	144 483
or H 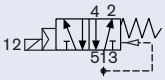 5/2-way valve, servo-assisted, in de-energized position pressure port 1 connected to port 2, port 4 exhausted							brass	brass, nickel-plated	147 244

1) Flow rate: QNn value air [l/min]: Measured at +20°C, 6 bar pressure at valve inlet, 1 bar pressure difference
2) Pressure values [bar]: Gauge pressures with respect to the prevailing atmospheric pressure.

All valves can be operated in circuit function C as well as in circuit function H. By replacing the adapter plate that comes with the valves, the change between the two circuit functions can be set up. All valves have mounting plates and tag connectors acc. to DIN EN 175301-803 Form A (previously DIN 43650) and are supplied without cable plug (see Accessories p. 10)

Manifold assembly see page 8 **Accessories** see page 10 **Dimensions** see page 16

DTS 1000011067 EN Version: D Status: RL (released | freigegeben | validé) printed: 05.10.2012

Pneumatic modules Type MP07

Single modules or pre-mounted blocks are available.

Example of a complete valve block

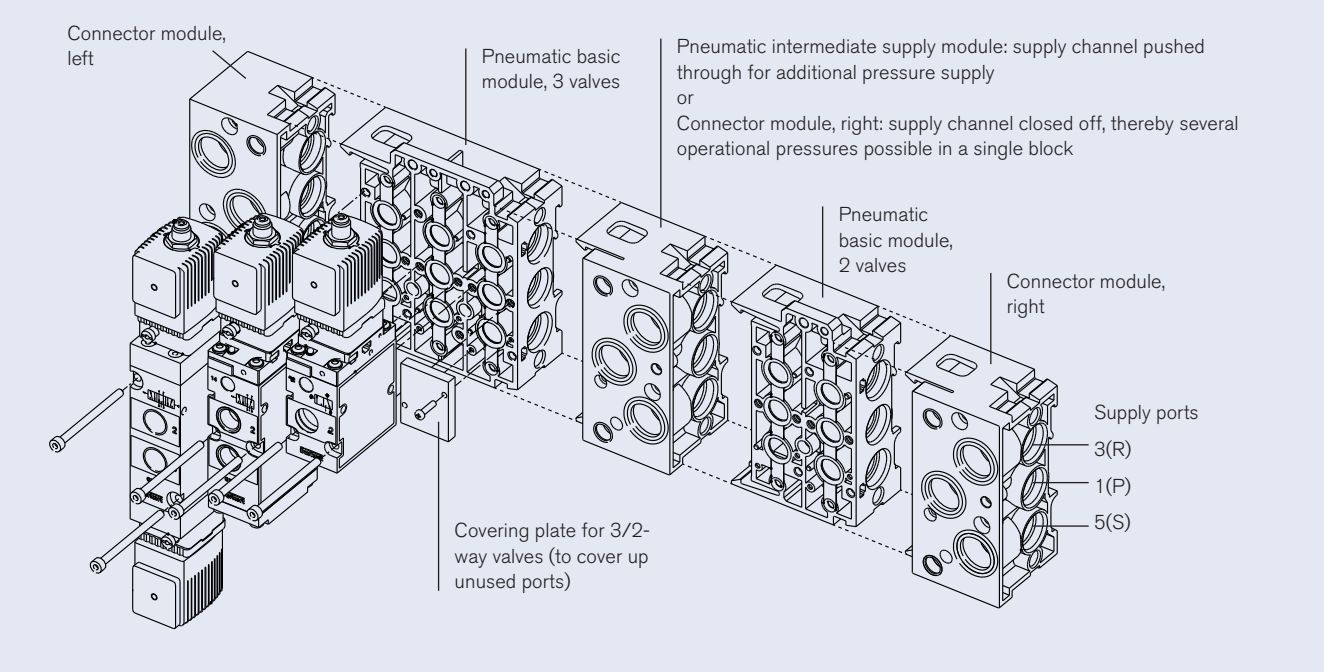

Note when ordering complete valve blocks:
Please list the modules in the block assembly from right to left, as shown in the ordering example.

Ordering example for Type 6518 with Type MP07

No.	Unit	Item no.
1	Connector module right, G1/2	635 331
1	Pneumatic basic module, 2 valves	635 319
1	Pneumatic basic module, 3 valves	635 343
1	Connector module left, G1/2	635 324
5	Valves	132 457

Ordering chart for Type MP07 pneumatic modules

Version	Item no.
Connector module right G1/2	635 331
Intermediate supply module	637 505
Pneumatic basic module, 2 valves universal (for 3/2-, 5/2- and 5/3-way)	635 319
Pneumatic basic module, 3 valves universal (for 3/2-, 5/2- and 5/3-way)	635 343
Connector module left G1/2	635 324
Covering plate for 5/2- and 5/3-way (to cover unused valve positions)	635 335
Covering plate for 3/2-way (to cover unused connections)	635 337

Type MP07 pneumatic modules, *continued*

Dimensions Type MP07 pneumatic modules [mm]

Manifold assembly either wall-mounted or standard mounting DIN rail 50022 or 50023

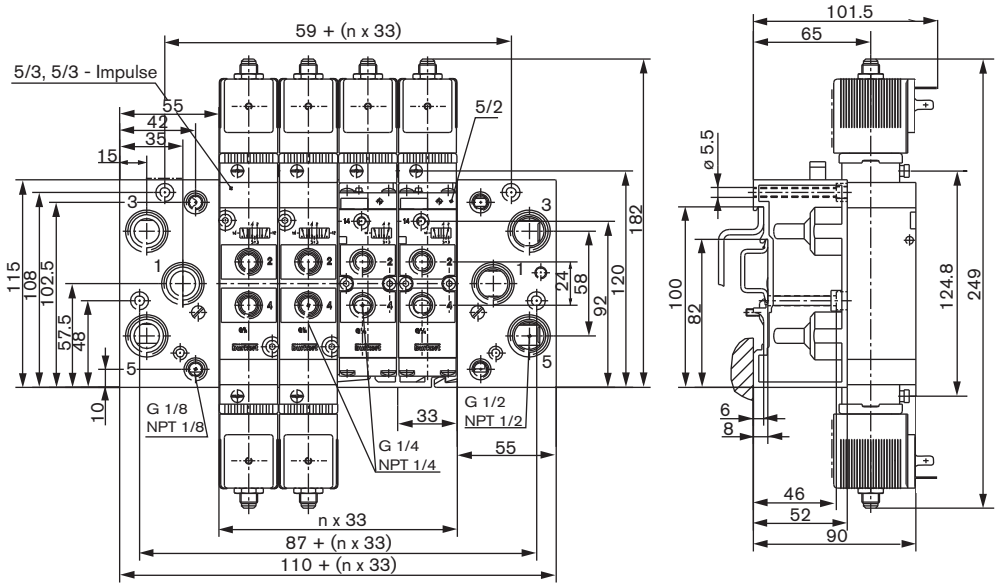

n=no. of valves, maximal 12

Valve assembly on pneumatic modules Type MP05 using the supplied M4 screws

Accessories

Cable plug Type 2508 acc. to DIN EN 175301-803 Form A

The delivery of a cable plug includes the flat seal and the fixing screw. For other cable plug versions acc. to DIN EN 175301-803 Form A (previously DIN 43650) with integrated circuitry, see datasheet Type 2508.

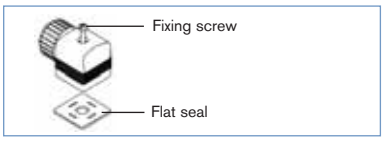

Dimensions Type 2508 [mm]

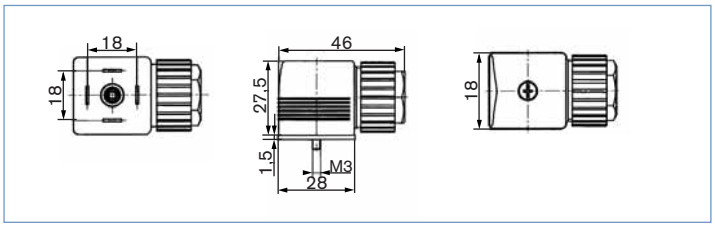

Ordering chart cable plug Type 2508

Circuitry	Voltage	Item no.
For standard version 6518/19 Fixing screw in steel (galvanised and chrome-plated)		
without circuitry	0 - 250 V	008 376
with LED	12 - 24 V	008 360
with LED and varistor	12 - 24 V	008 367
with LED and varistor	200 - 240 V	008 369
For EEx i version 6519 Fixing screw in stainless steel 1.4404 and blue compression gland nut		
without circuitry	0 - 250 V	438 574
for further versions see datasheet 2508		

Ordering chart further Accessories

Accessory	Feature	Item no.
Cap nut 	Cap nut in stainless steel for additional protection of the exhaust air channel from the penetration of damp	649 554
Blanking plug	G 1/8	780 141
	G 1/4	780 142
	G 1/2	780 144
Silencer	G 1/8	005 305
	G 1/4	005 064
	G 1/2	005 062
Labelling plate	64 pieces	635 416

Semi-delay fuse for 6519 NAMUR EEx m

Voltage [V]	Max. current [mA]	Item no.
24 V	315 mA	153 733
110 V	50 mA	153 716
230 V	32 mA	153 715

DTS 1000011067 EN Version: D Status: RL (released | freigegeben | validé) printed: 05.10.2012

Dimensions [mm]

Standard versions

Type 6518
3/2-way valve, circuit function C and D

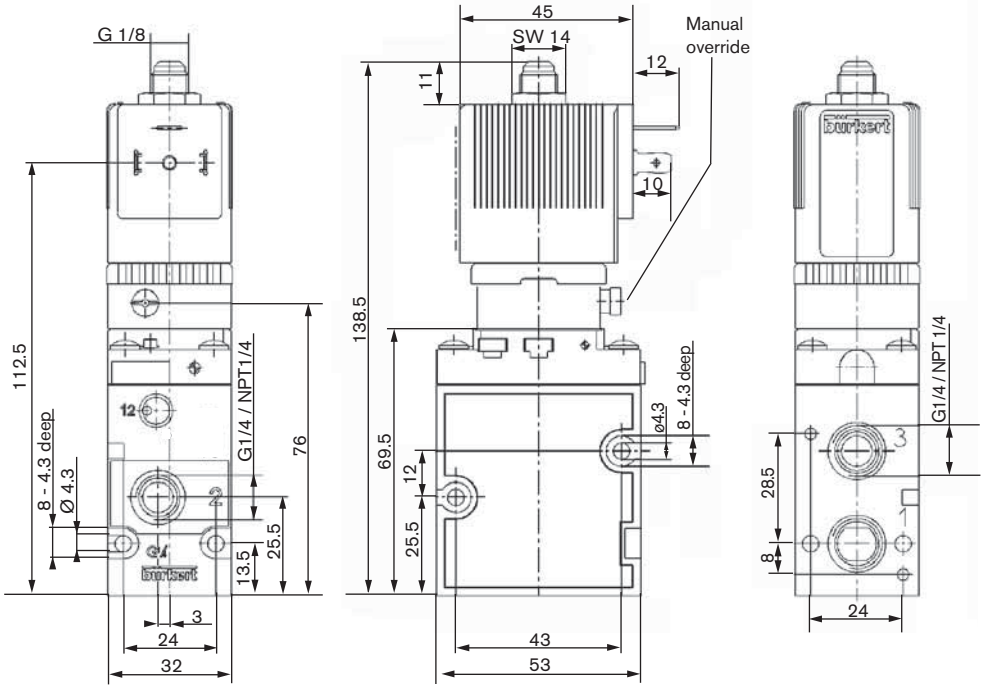

Type 6519
5/2-way valve, circuit function H

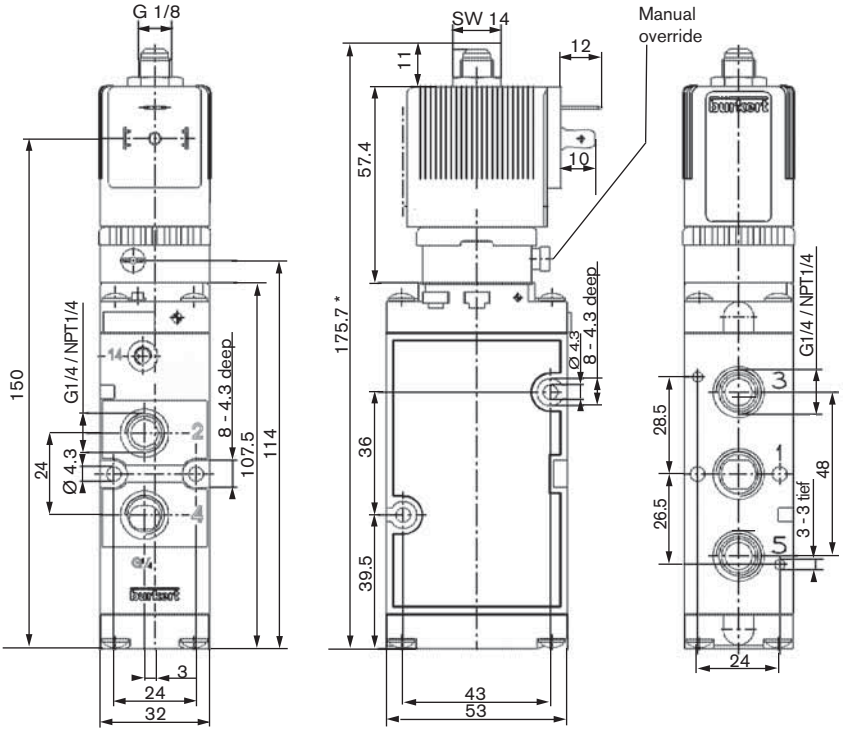

* Mounting length with 2 magnetic coils 249 mm

Dimensions [mm]

Standard versions

Type 6519
5/3-way valve, circuit function L and N

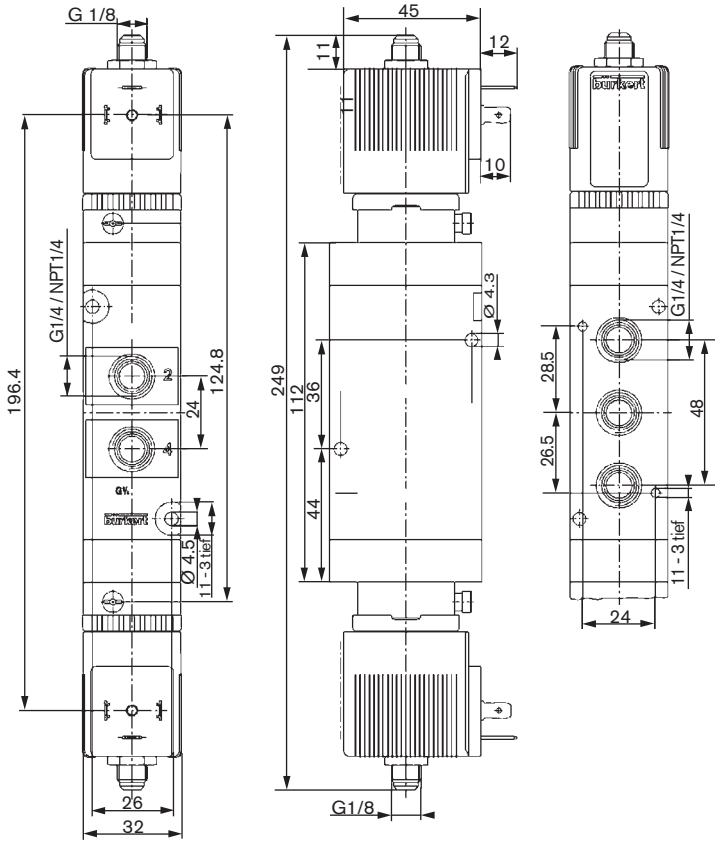

Dimensions [mm]

EEx m/me versions

Type 6518
3/2-way valve, circuit function C and D

with moulded cable, 3 m long (EEx m)

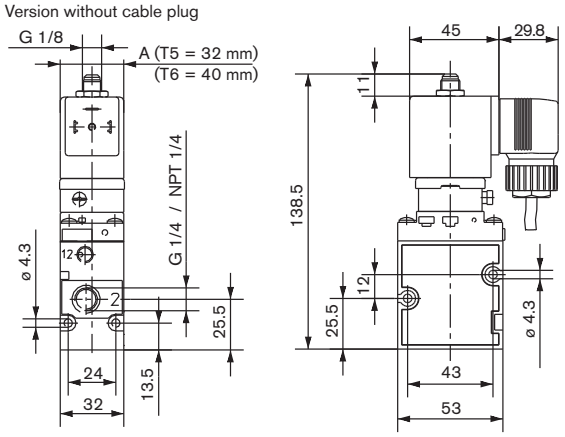

with terminal box (EEx me)

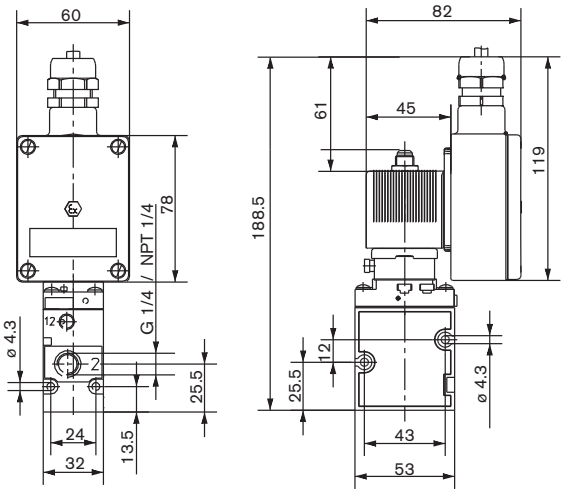

Type 6519
5/2-way valve, circuit function H, L and N

with moulded cable, 3 m long (EEx m)

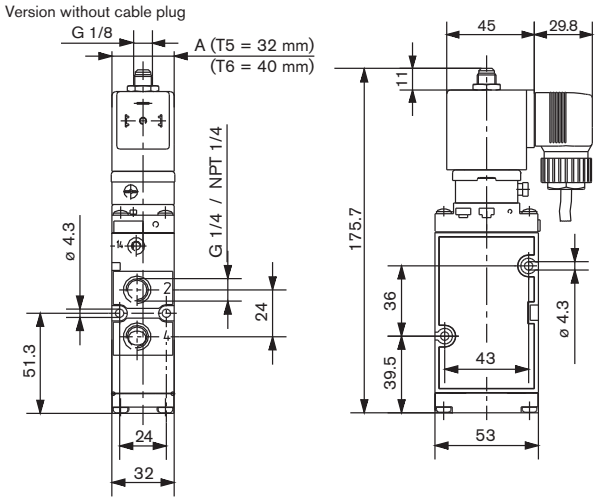

with terminal box (EEx me)

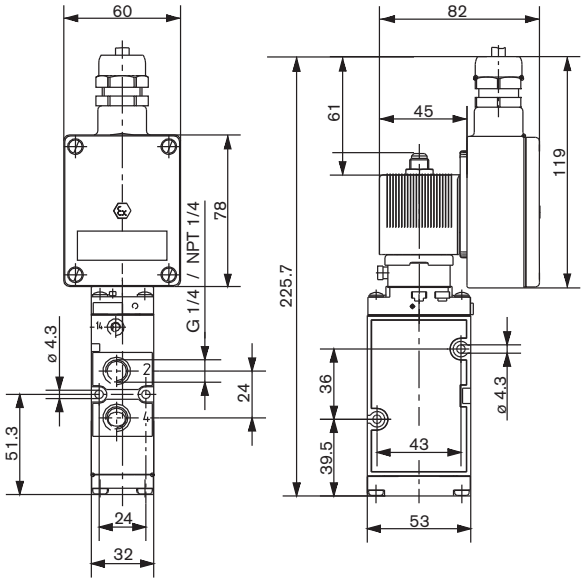

Dimensions [mm]

EEx i versions

Type 6518
3/2-way valve, circuit function C

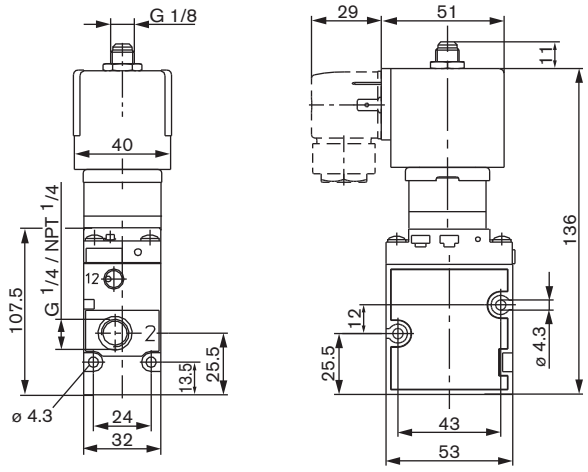

Type 6519
5/2-way valve, circuit function H

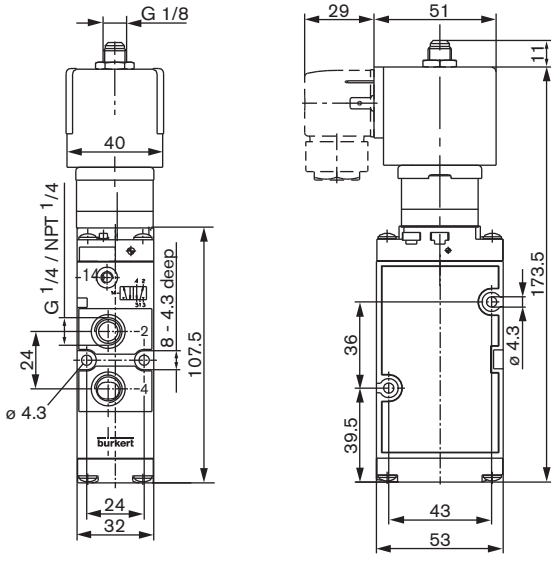

Dimensions [mm]

NAMUR standard version

Type 6519
3/2-way valve, circuit function C or 5/2-way valve, circuit function H

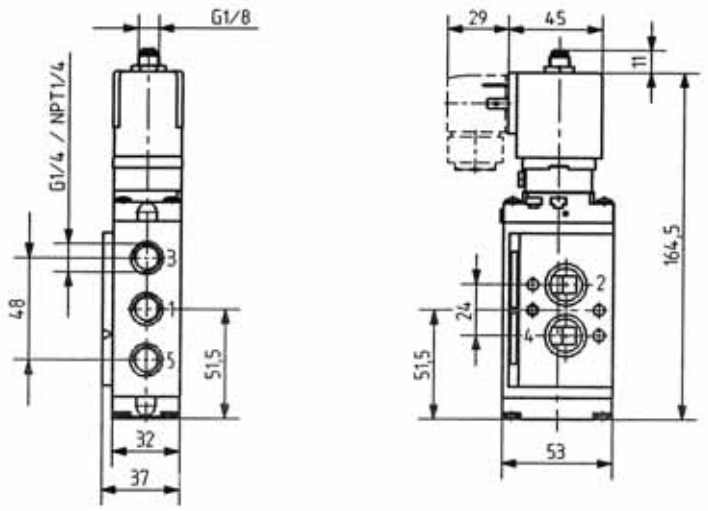

NAMUR EEx m/me versions

Type 6519
3/2-way valve, circuit function C or 5/2-way valve, circuit function H

with moulded cable, 3 m long (EEx m)

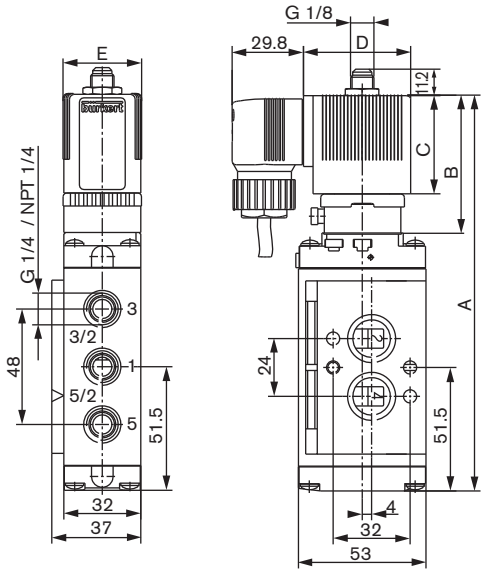

with terminal box (EEx me)

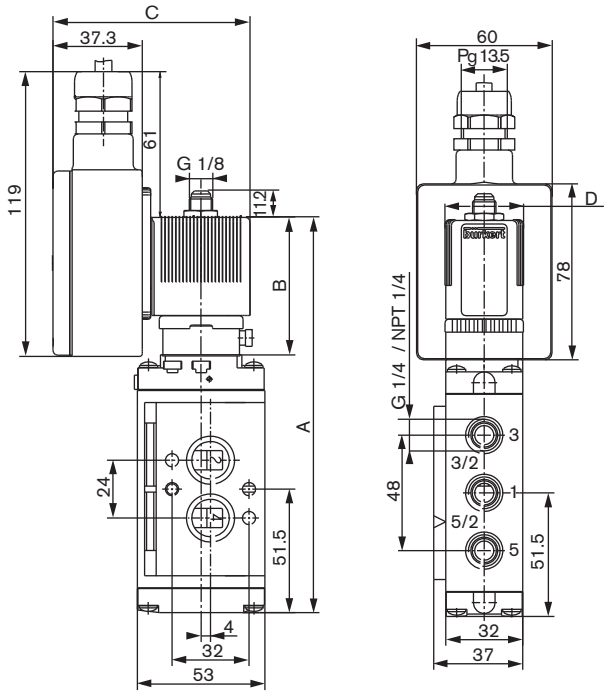

	A	B	C	D	E
T5 coil	164.5	57.5	41.0	45.0	32
T6 coil	164.9	57.9	41.4	51.0	40

	A	B	C	D
T5 coil	164.5	57.5	82	32
T6 coil	164.9	57.9	88	40

DTS 1000011067 EN Version: D Status: RL (released | freigegeben | validé) printed: 05.10.2012

Dimensions [mm]

NAMUR EEx i version

Type 6519
3/2-way valve, circuit function C or 5/2-way valve, circuit function H